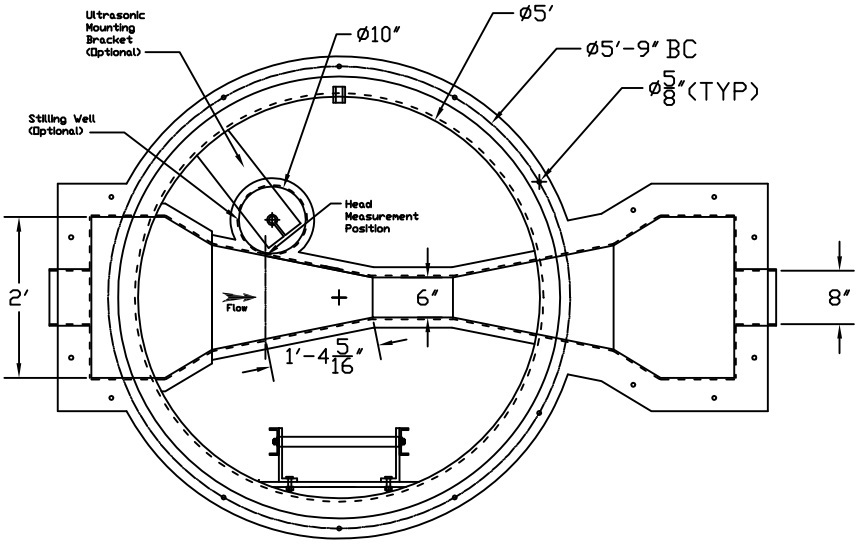

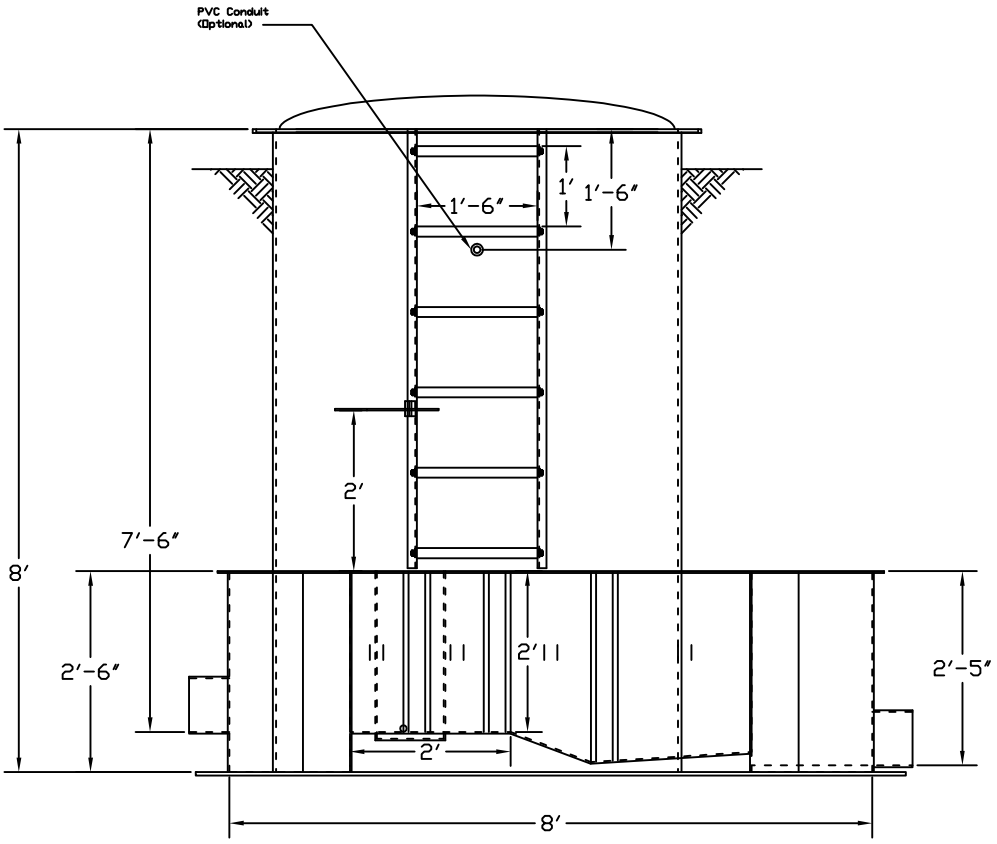

Virtual Polymer Compounds, LLC 10478 Ridge Rd., Medina, NY 14103 (585) 735-9668			
DRAWING Metering Manhole with 6″ Parshall			
PROJECT		DWG 01	REV 01
NOTES	DATE 01/4/2010	JOB NO. XXXXX	
Details may not be to scale.	SCALE 28.67:1		